E298A/EE290B – E-Beam System Issues

- Purpose: To Understand System Level Issues
  - Historical Evolution
  - Beam Deflection – Vector Scan, Shape beam, Raster Scan
  - System components
  - Example of LBNL Nanowriter

Top Level of E-Beam System Architecture

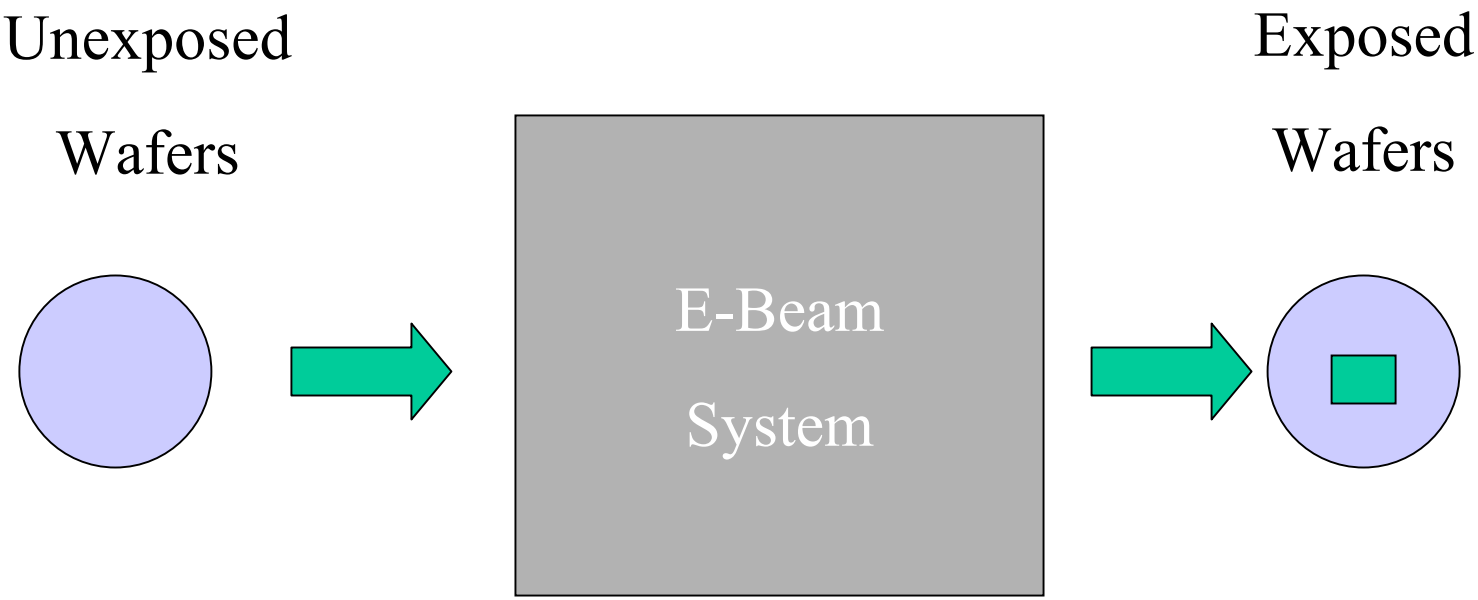

Top Level of E-Beam System Architecture

High Level Specifications

E-Beam

System

- Resolution – Process
- Throughput
- Placement Accuracy
- Exposure Area
- Cost
- Sample Size

Top Level of E-Beam System Architecture

Resolution

Resolution depends on the E-Beam System **and the process**

- E-Beam System
  - Beam size, beam stability, mechanical stability
  - Beam operating voltage
  - Detectors/Algorithms for Focus and Stigmation
  - Ability to maintain Focus/Stigmation within the exposure area
- Resist and Processing
  - Intrinsic resist properties and Mechanical properties

Top Level of E-Beam System Architecture

Throughput

- Resist Sensitivity [μC/cm^2] *KRS=30, PMMA=700, HSQ=1000*
- Beam Current *(400-500pA normal, 10nA available)*
- Stage motion *(2 sec small move)*
- Pattern generator Overheads
  - Digital to Analog Converter (DAC) settling Time
  - Shape computation overhead *(highest for many small shapes)*
  - Data flow i.e. hard-drive *(highest for many small shapes)*

Top Level of E-Beam System Architecture

Resist Sensitivity

Resist	Uses	Tone Sensitivity	Dense Iso	Advantage	Disadvantage
KRS (IBM)	KZP Masks	P 30 $\mu C/cm^2$	60nm 40nm	Fast, stable No PEB	Acid etch resistance
PMMA	Liftoff	P 700 $\mu C/cm^2$	40nm 20nm	Good resolution	Slow, outgassing, metrology difficult
SAL601 AZpn114	Device	N 100 $\mu C/cm^2$	80nm 35nm	Fast, good etch resistance	Modest resolution
Calixarene	Zone Plates	N 20,000 $\mu C/cm^2$	25nm 10nm	Ultra-high resolution	Very Very Slow Supply QC
HSQ Bi-layer	Multi-Purpose	N 1000 $\mu C/cm^2$	30nm 15nm	High-resolution Etch resistance	ICP etch required Modest speed

Top Level of E-Beam System Architecture

Placement Accuracy

Fundamentally depends on system stability, repeatability, and calibration techniques.

- Almost all repeatable and measurable errors can be eliminated with proper calibration. “The accuracy is in the software” Peter Crawley Past Director of Leica Lithography
- Error numbers are usually mean + 3σ
- Stitching errors
- Absolute Placement (vs IPRO, LMS20/20)
- Overlay (wafer to wafer or mask to mask)

Top Level of E-Beam System Architecture

On Axis Calibration of the Nanowriter

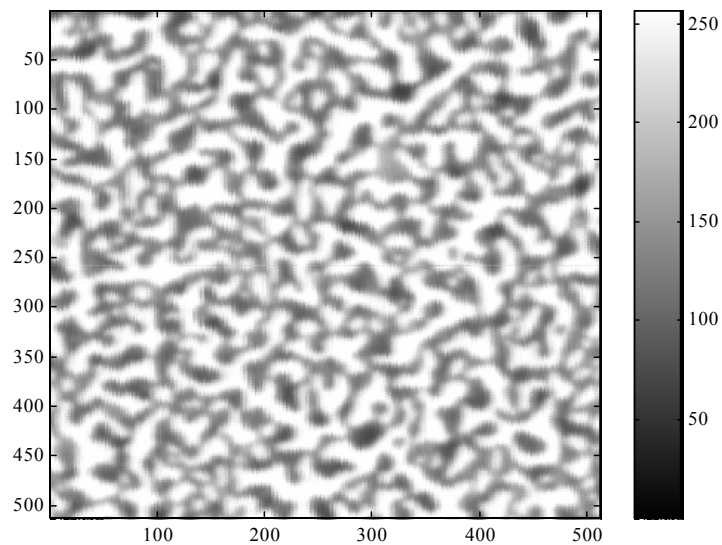

High Spatial Frequency
Gold Island Sample

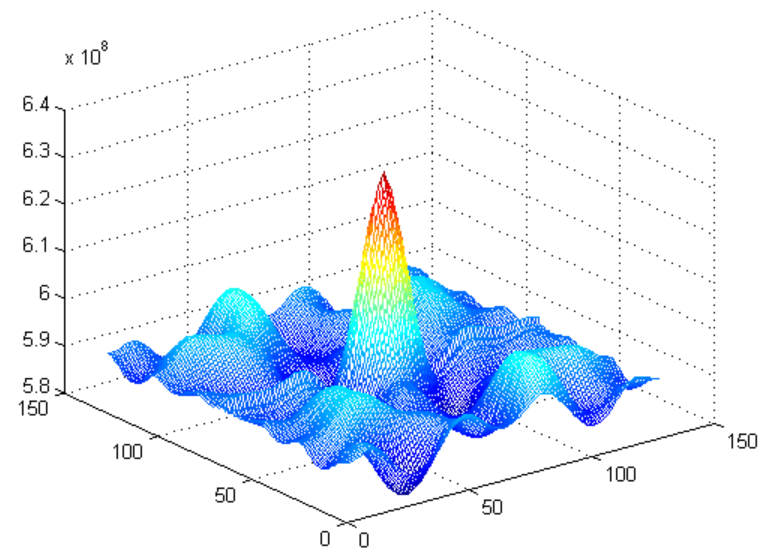

Auto-correlation for
Focus and Stigmation

System Architecture Historical Evolution

Modified SEMs and PMMA 1970s

"Flying Spot Scanner" Pattern Generator

PMMA was a "breakthrough" for e-beam lithography

- Good resolution
- Poor sensitivity
- Poor etch resistance
- Good for liftoff

M. Hatzakis, "Electron resists for microcircuit and mask production," J. Electrochem. Soc. 116, 1033-1037 (1969).

System Architecture Historical Evolution

IBM VS-6 ≈ 1989

Deflection Amp

Rotation Correction

Alignment

Computer

IBM Series 1

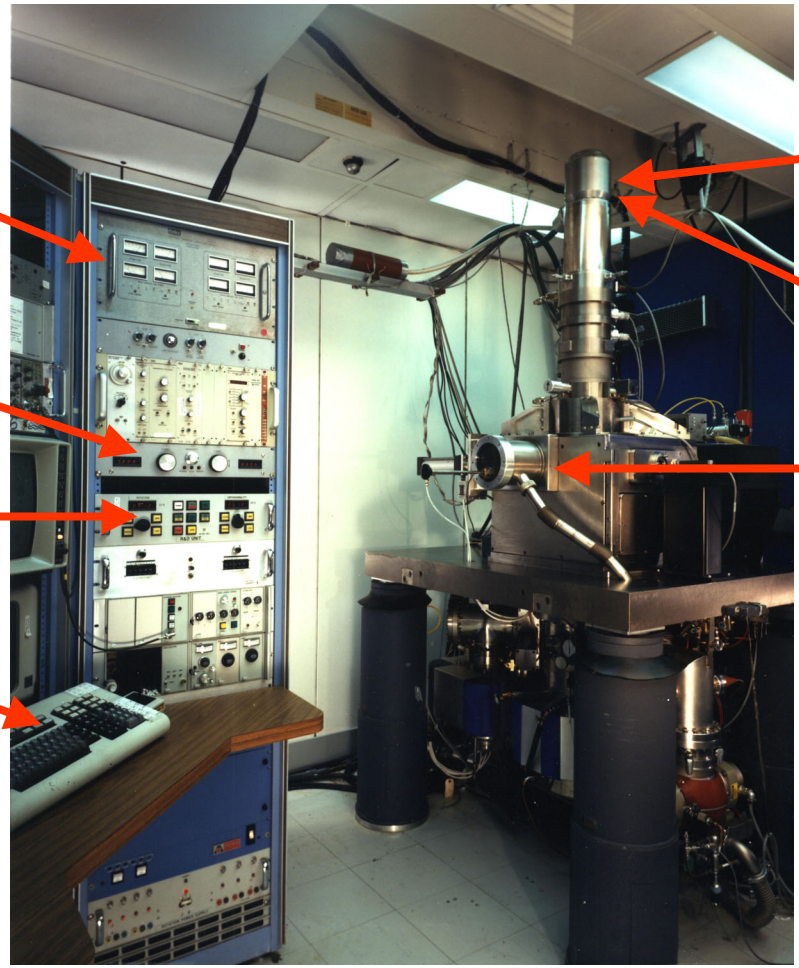

LaB_6 Source

50KV

Manual Load

System Architecture Historical Evolution

Dedicated E-Beam Systems

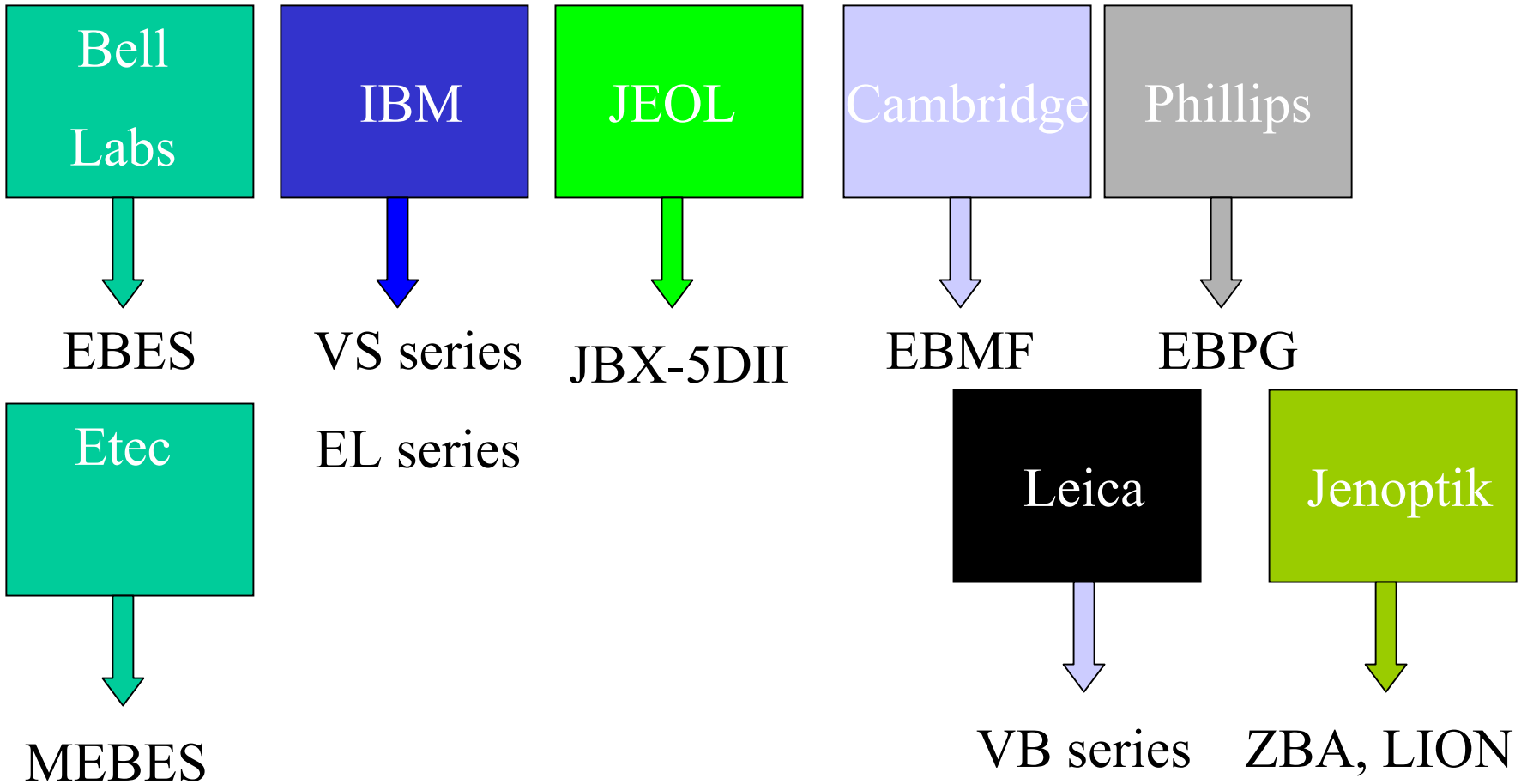

System Architecture

Beam Deflection - Raster

- Raster beam, also called Gaussian beam.
- Example Etec MEBES – Mask making.
- Beam moves in a periodic pattern like a TV display. The beam is blanked on and off to produce the pattern.
- Advantages: Fast, Non-linear effects can be corrected, Quasi one dimensional deflection and periodic signal simplifies electronics.
- Disadvantages: Difficult for dose control, sparse patterns require longer exposures.

System Architecture

Beam Deflection – Shaped Beam

Shaped beam, also called vector (by Etec)

- Example IBM EL4, ZBA 320 – Mask Making and ASIC.
- Beam is deflected over a set of apperatures to form a basic shape such as a rectangle and then demagnified by the final lens.
- Advantages: Speed, entire shapes are flashed at once.
- Disadvantages: Complexity, several additional deflection and shaping components are required.

System Architecture

Beam Deflection – Vector

Vector beam,

Examples IBM VS6, Leica VB series, EBPG, Jeol JBX

• Beam is deflected in a vector fashion with one or more deflection coils to fill in the shape of interest. Fill in can be basket weave, spiral, or raster.

•Advantages: Speed for sparse patterns, accuracy.

• Disadvantages: Some non-periodic errors are difficult to correct.

System Architecture

Beam Deflection – E-Beam Projection

Subject of Future Lecture

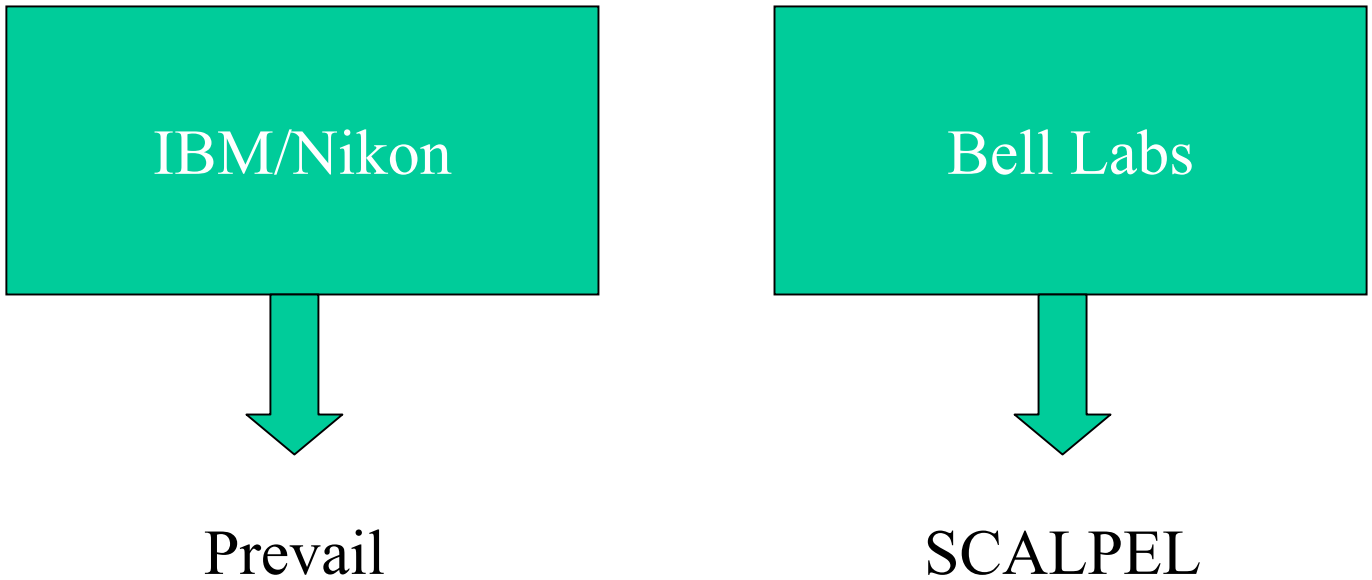

System Architecture

Typical System components

Source

Electrostatic lens

Magnetic lens

Deflector

Blanker

Height Sensor

Laser Interferometers

Vacuum system

Pattern Generator

System Architecture

Sources

Source

- Tungsten
- LaB_6
- Thermal Field Emmiter (Schottky)
- Cold Field Emmiter

System Architecture

Source Characteristics

Source Type	Brightness [amp/cm2/str]	Source Size	Energy Spread	Vacuum Required (Torr)
Tungeston	10^5	25um	2-3eV	10^{-6}
LaB_6	10^6	10um	2-3eV	10^{-8}
TFE	10^8	25nm	0.9eV	10^{-9}
Cold FE	10^9	5nm	0.22eV	10^{-10}

System Architecture

Nanowriter system specifications

- Column, Stage, and Ancillary Hardware based on Leica VB6-HR
- Pattern Generator, Data Path Developed at Berkeley Lab
- Beam Voltage 20-100KV
- Beam Size 5-10nm⇒5-8nm
- Deflection Rate 25MHz
- Resolution 16 Bit
- Interferometer $\lambda/1024$
- Wafer Size 75-200mm
- Electron Detection Backscattered and Transmission

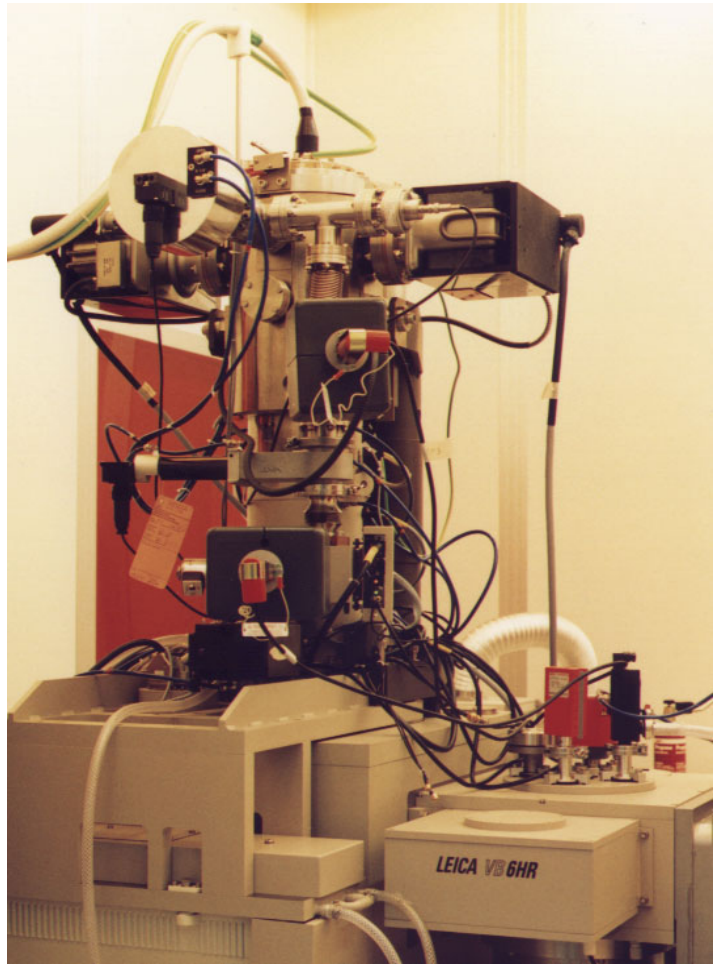

System Architecture

Vector Beam Block Diagram

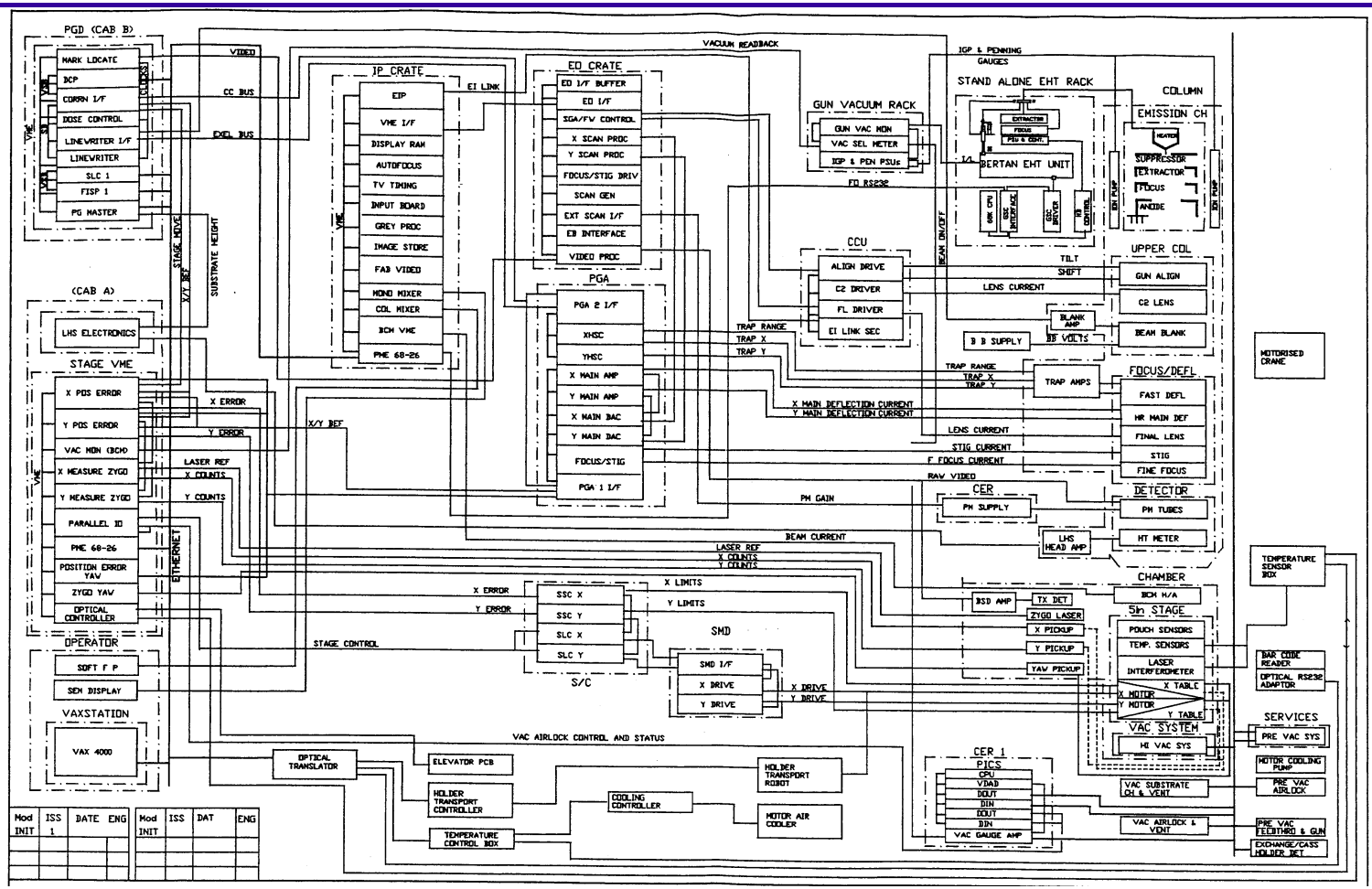

System Architecture

Gun and deflection

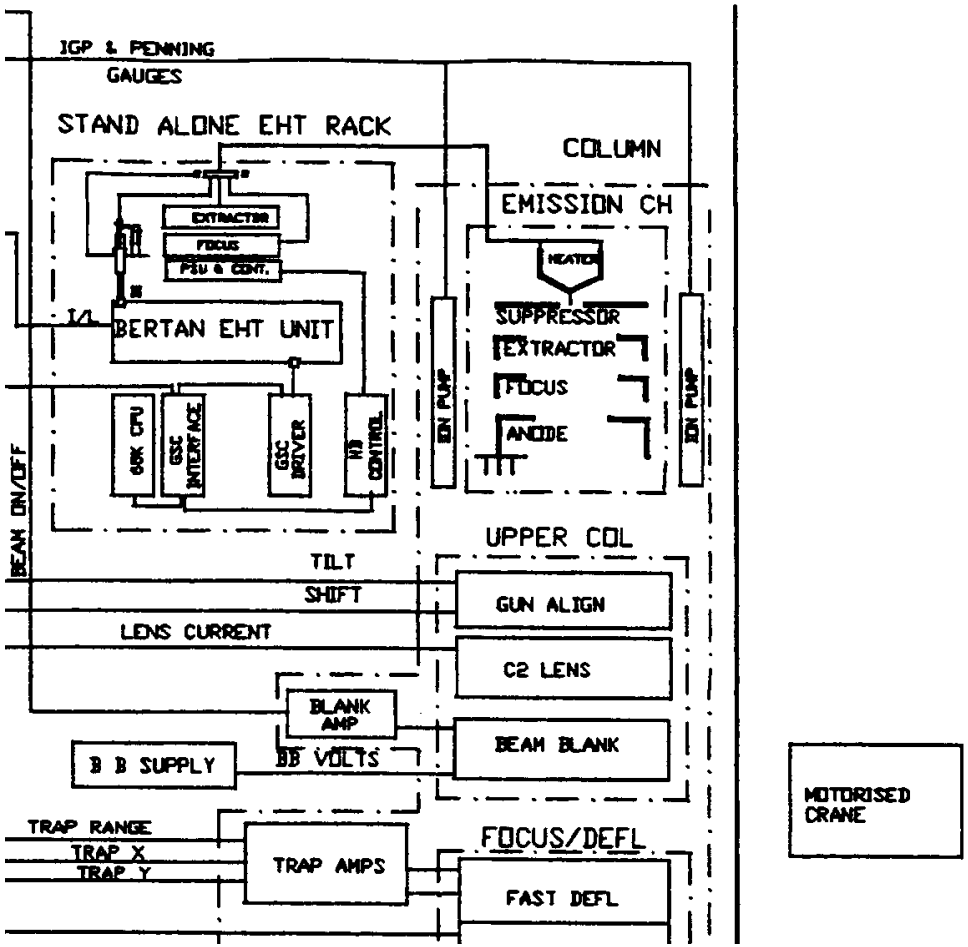

System Architecture

Deflection

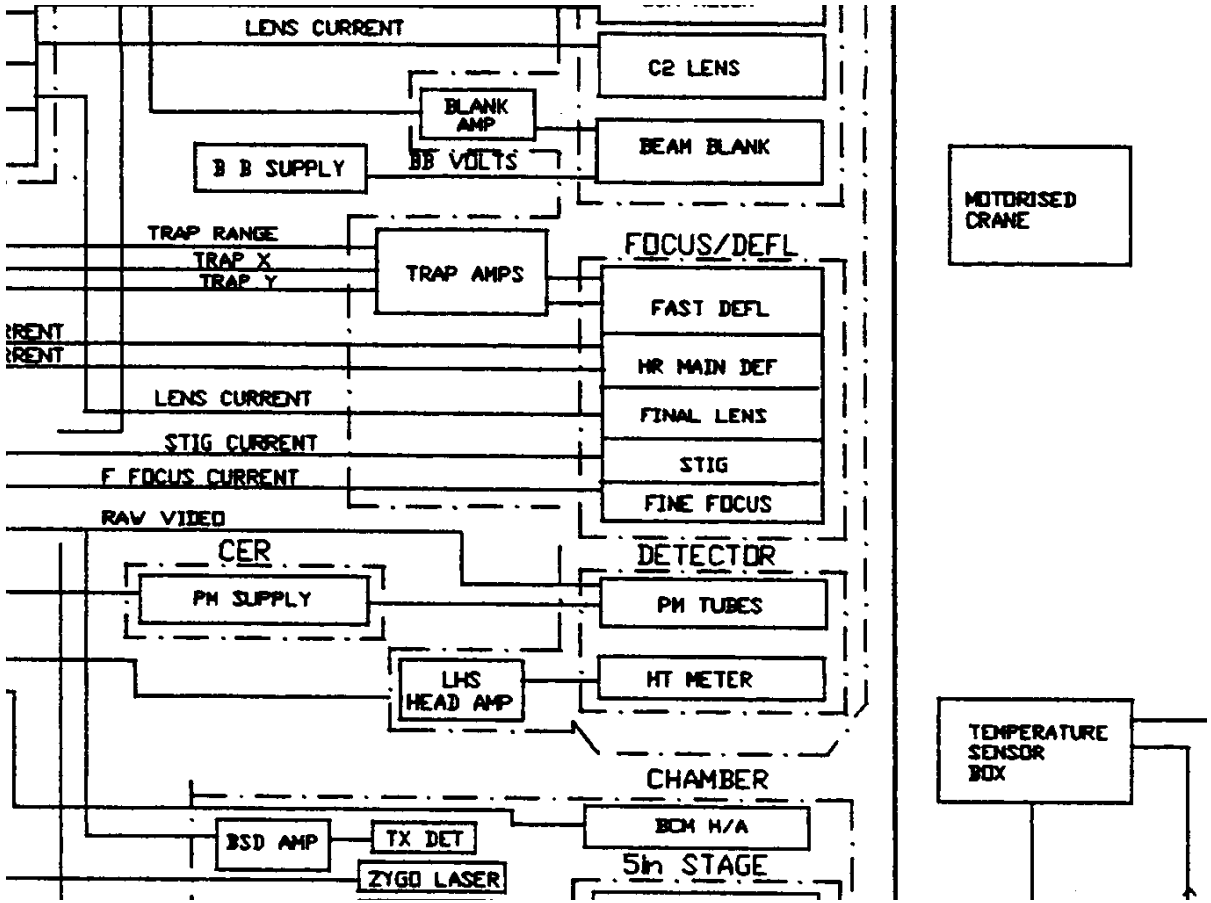

System Architecture

Chamber

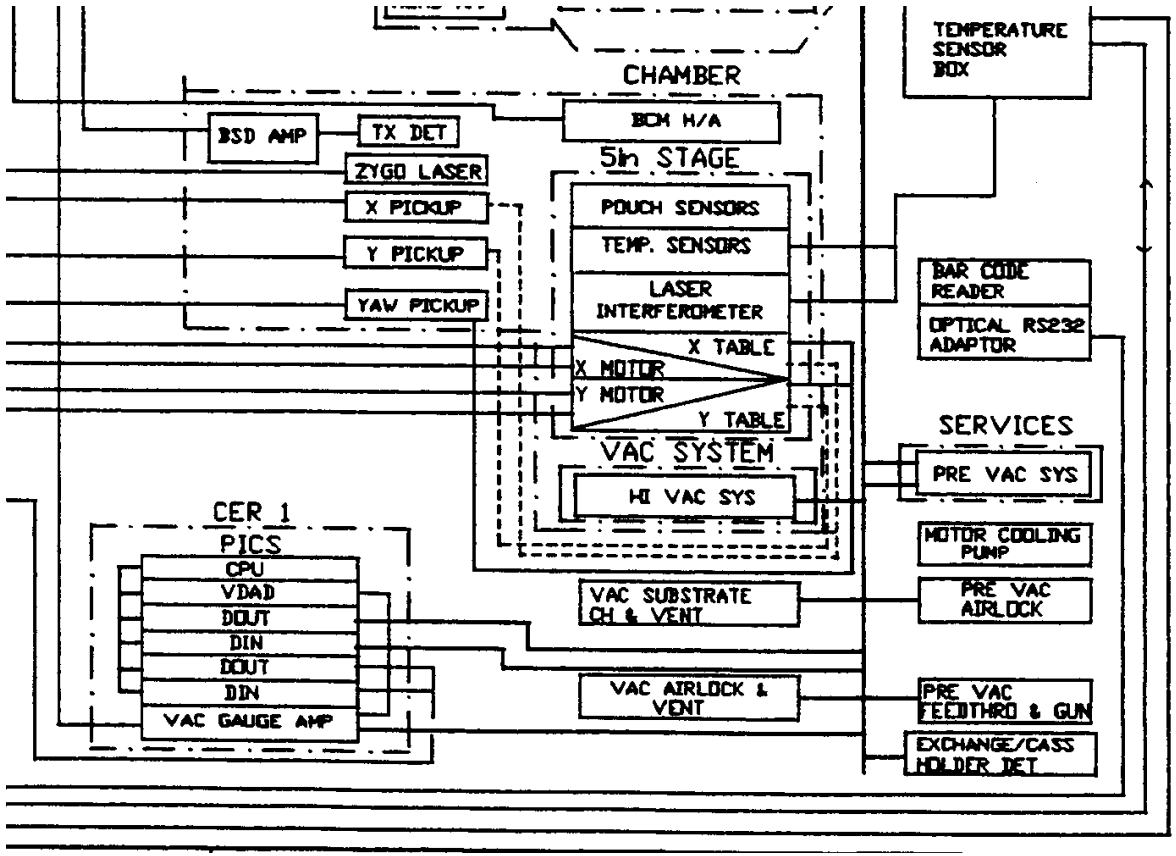

System Architecture

Column

Gun

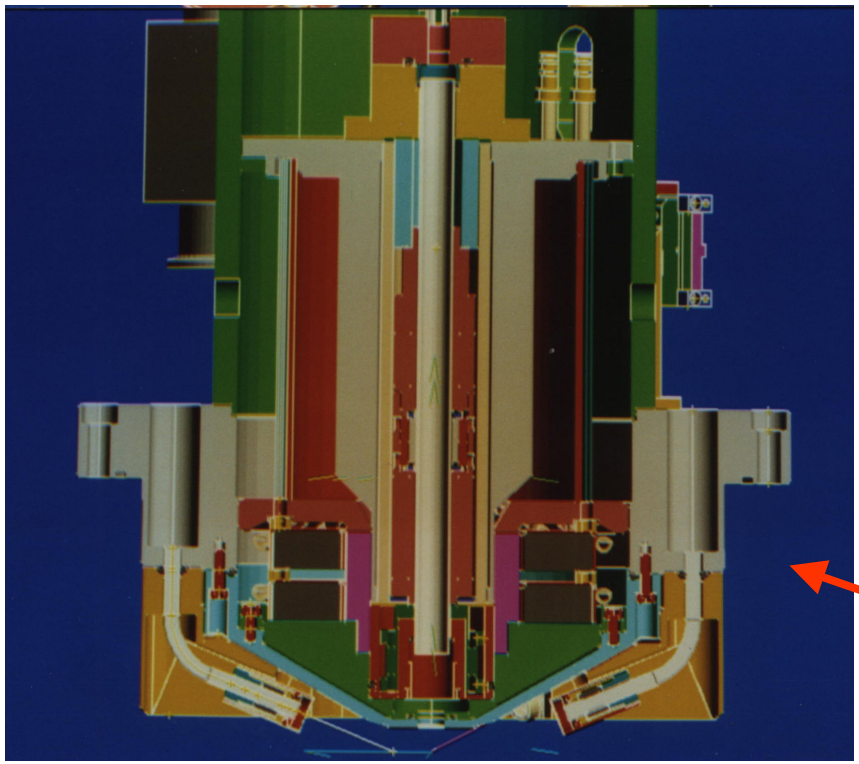

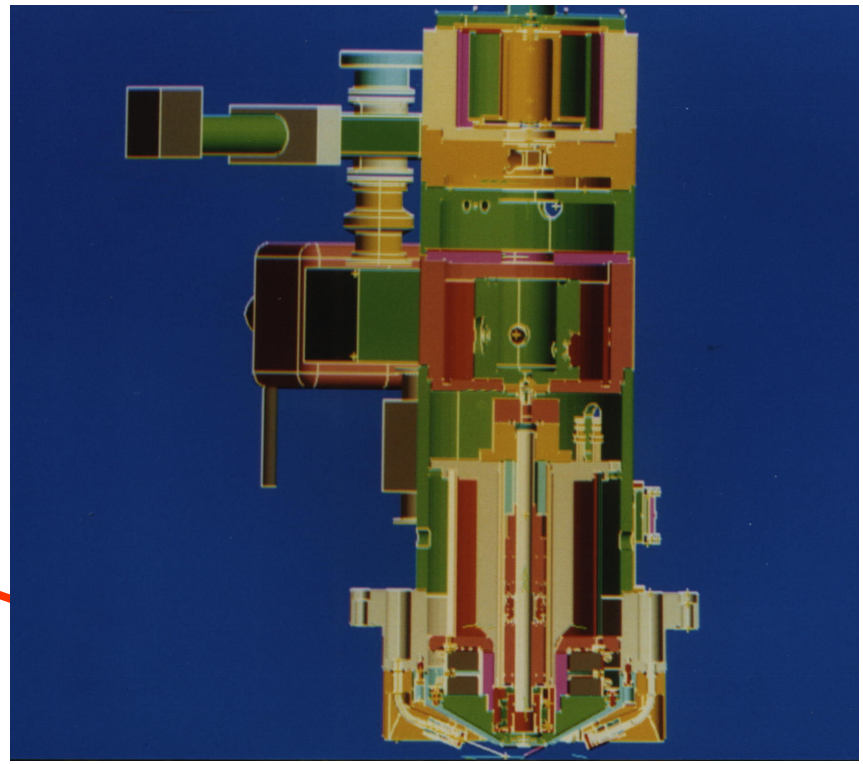

Wafer